# PRODUCT SHEET

**Description:**
Padlockable Cam Lock "Roto", 180DG, L/R, ø22x25mm, Chrome Plated, Straight Cam Plate C/E: 45mm, Pre-installed as Right, Hand, Can be Changed to Left Hand, Hex Nut Fixing, 8mm, Shackle Hole

**Item number:**
14.04.578-0

| Units | Box | Carton | HS Code | Barcode |
|---|---|---|---|---|
| Pcs. | | | 8301300000 | 5704866520539 |

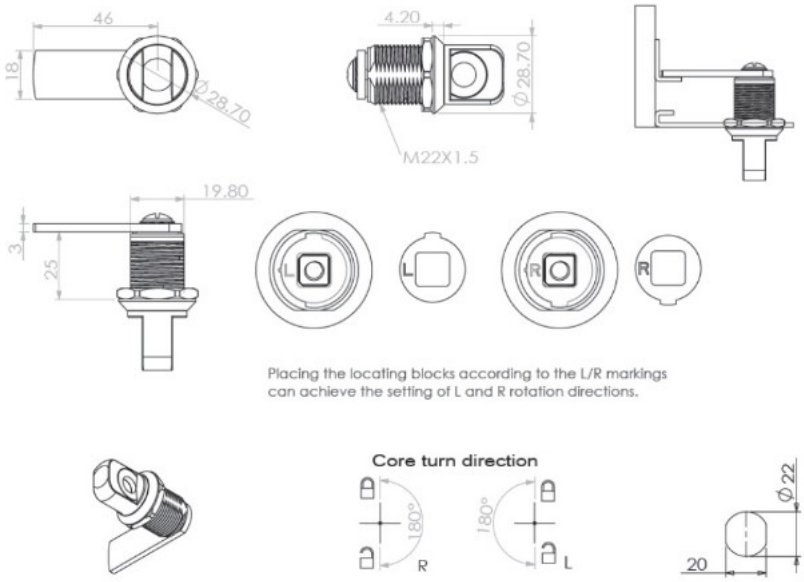


**SISO A/S**
Mileparken 11
DK-2740 Skovlunde
Denmark
VAT: 24786013

Phone +45 45 830 900

www.siso.dk
siso@siso.dk

Danske Bank
Nytorv Branch
Copenhagen
SWIFT: DABADKKK

Account no.
4180 3112 112936
IBAN Account
DK7230003112112936